FENESTRATION CANADA

# Window Energy Performance

## Meeting the Climate Challenge: Now to 2030

Pacific Energy Innovation Association—Energy Breakfast Webinar

June 8, 2021

Al Jaugelis, Director for Regulatory Affairs

PEIA

PACIFIC ENERGY INNOVATION ASSOCIATION

# Topics

1. Introduction
2. Windows have come a long way
3. Anatomy of a modern window
4. Window energy performance properties
5. The future of windows is triple glazed
6. What comes next?

# 1 Introduction

# U-value and R-value

**U-value**

- A measure of the rate of thermal transmisttance per unit area per unit time
- Used for assemblies composed of disparate materials or layers, such as a window or a wall
- Commonly reported to two or more decimal places: 1.22 $W/m^2$-K
- Lower is better!

**R-value**

- A measure of thermal resistance generally used to compare homogenous materials such as insulation
- Commonly reported in whole numbers, or to one decimal place
- Higher is better!

# R-value vs. U-value

**R-value**

Technically, R-value is 1/C where C is the conductance of a uniform material such as wood or insulation

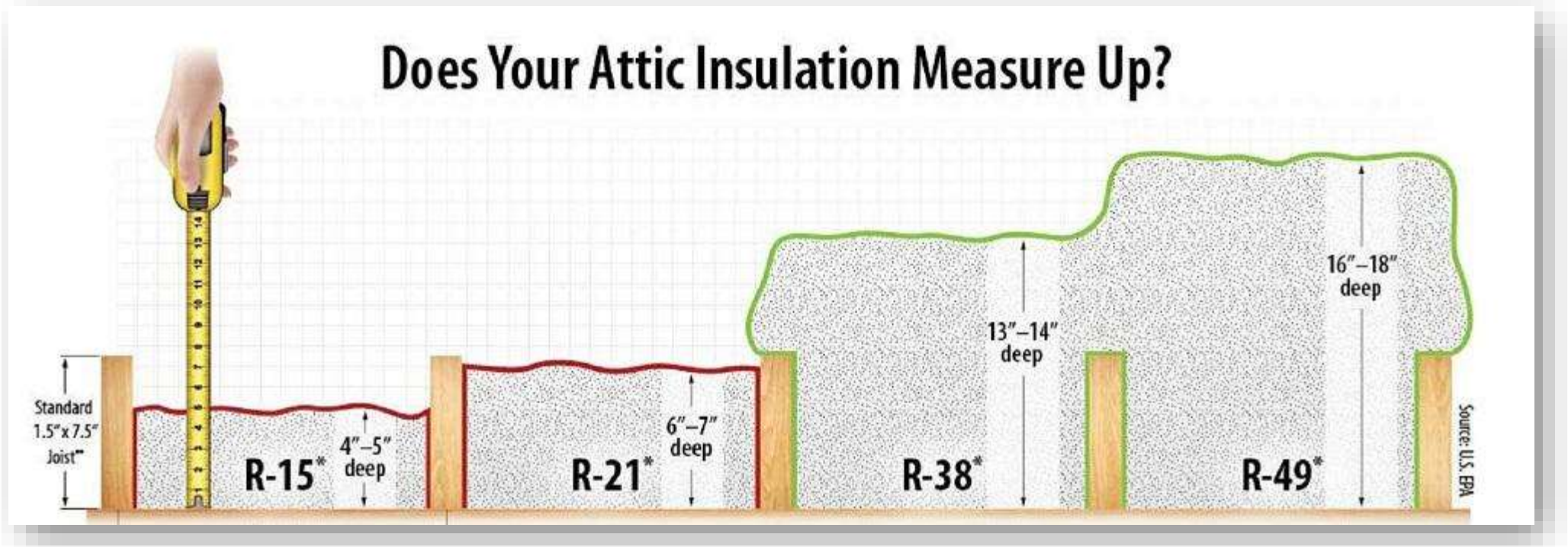

# R-value = 1 / U-value?

These days, R-value is often used to report the thermal resistance of complex assemblies such as walls, roofs, windows and doors!

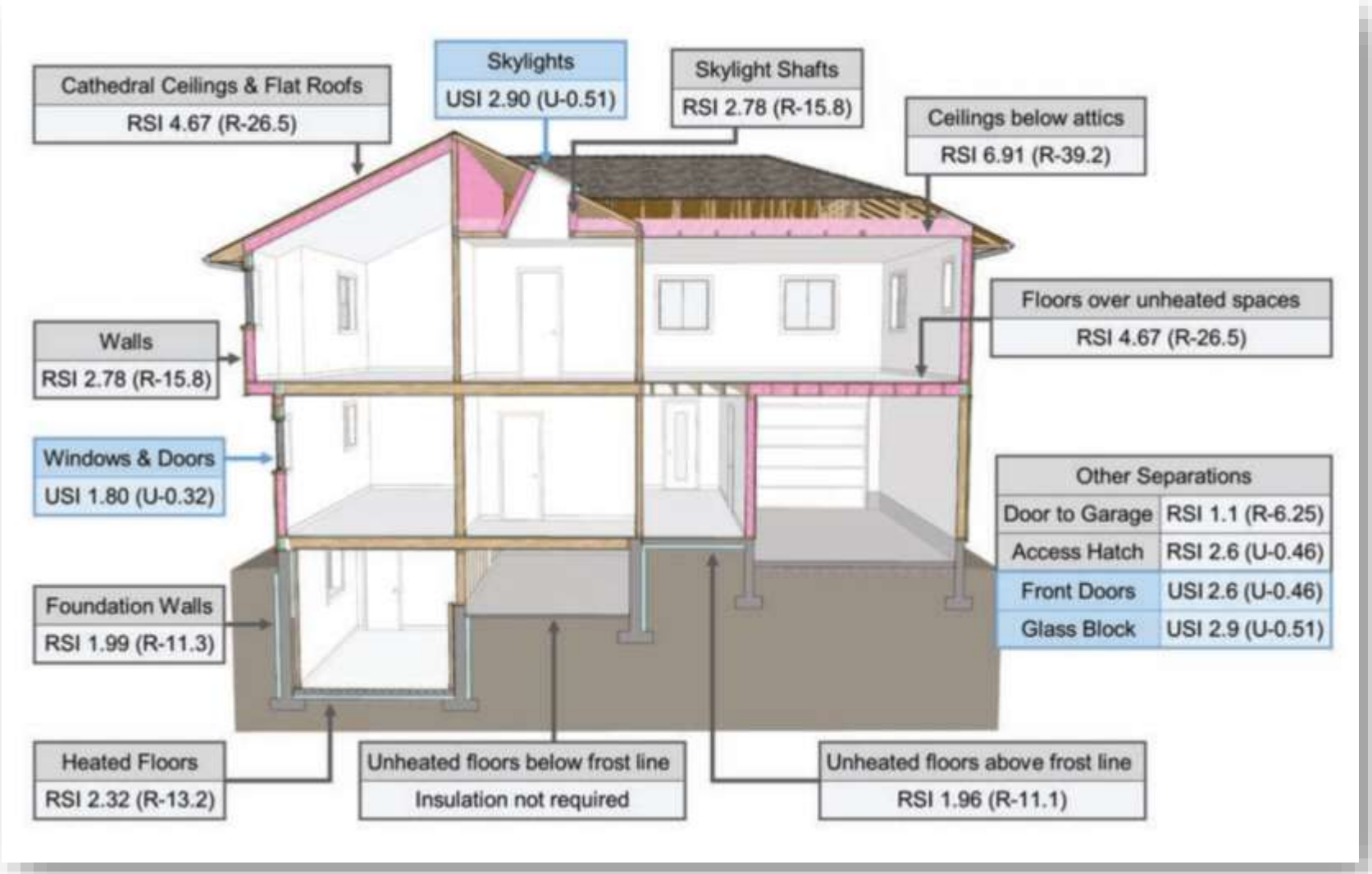

# 2 Windows have come a long way

# Windows . . .

“. . . windows are typically the worst-performing elements of the building enclosure . . .”


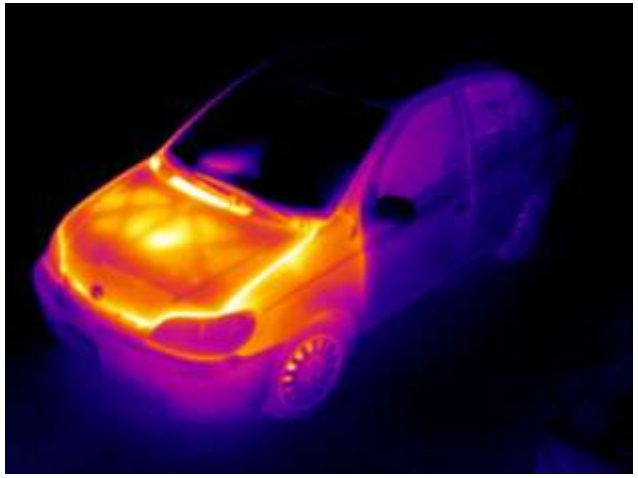

# Windows have come a long way

From R-1 single glazed aluminum windows in the 1960s–70s, to R-3 dual pane low-e/argon glass in vinyl frames today


# Windows have come a long way

- From R-1 single glazed aluminum windows in the 1960s–70s, to R-3 dual pane low-e/argon glass in vinyl frames today

# Windows have come a long way

Walls: ~R-15 effective

Windows: ~R-3


Walls: ~R-7 effective

Windows: ~R-1


→ We are losing less heat through windows and through walls during the heating season

# Windows have come a long way

| Window type | R-value | U-value (metric) |
|---|---|---|
| Single pane | R-1 | 4.8 |
| Dual pane, air filled | R-2 | 2.8 |
| 2012 BCBC | R-3 | ≤ 1.80 |
| 2015 ENERGY STAR Zone 1 (Southern BC) | R-3.6 | ≤ 1.60 |
| 2020 ENERGY STAR (all Canada, no Zones) | R-4.8 | ≤ 1.22 |
| 2021 ENERGY STAR "Most Efficient" | R-5.6 | ≤ 1.05 |
| Passive House – central European | R-7 | ≤ 0.82 |
| – Practical limit of commercially available glass fabrication technology – | | |

R-2 to R-4 performance is achievable with dual pane glass

R-5 to R-7 performance requires triple pane glass and better insulated window frames

Performance well beyond R-8 requires glass technologies that will not be commercially available at scale for at least a decade or more

# Today's window performance levels

- Today's "standard product" vinyl, wood and fiberglass windows (1 low-e coating) meet or exceed the current BCBC energy performance level for climate zones 4 and 5 (Kamloops): USI-1.80

  5 3000 to 3999 HDD
  4 < 3000 HDD

- With an extra low-e coating, they can achieve the BCBC level for climate zones 6 and 7A (Dawson Creek): USI-1.60

  7A 5000 to 5999 HDD
  6 4000 to 4999 HDD

- Triple pane windows are the best option for the northern zones 7B and 8: USI-1.40

  8 ≥ 7000 HDD
  7B 6000 to 6999 HDD

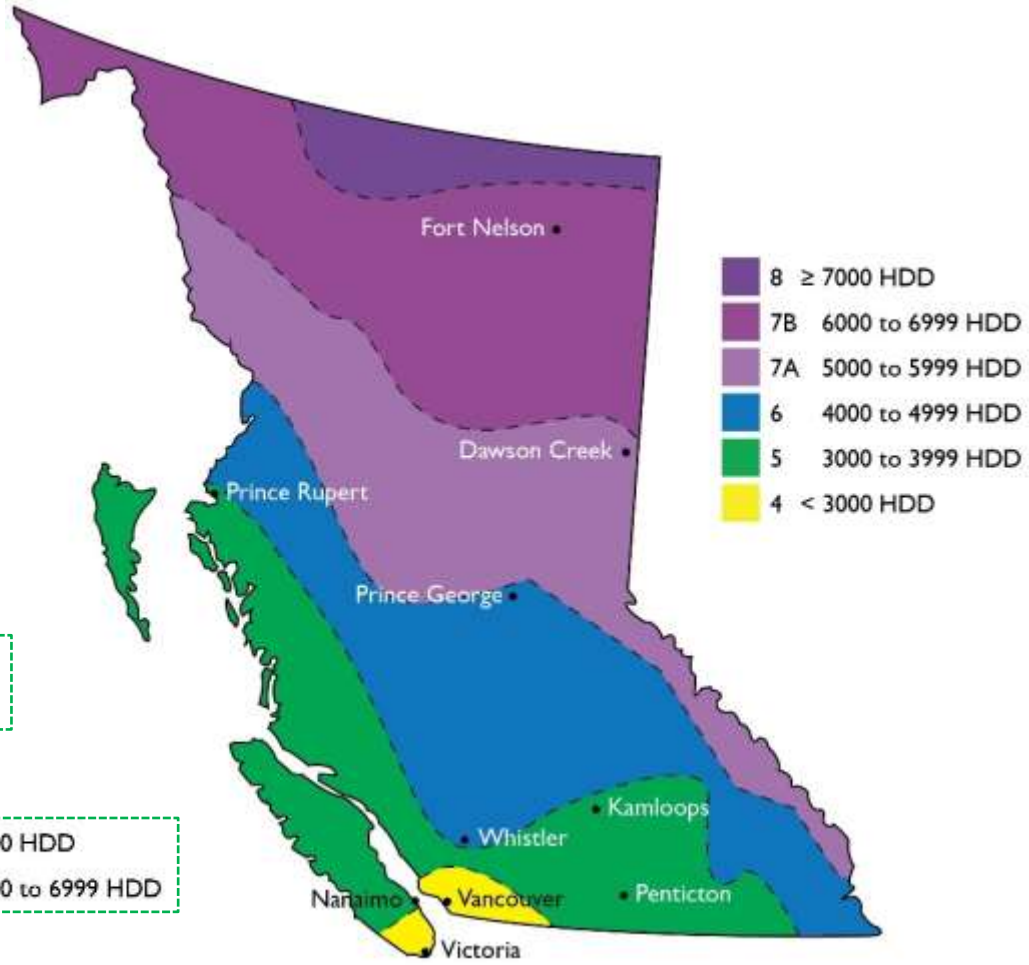

# Today’s window performance levels—future

- BC’s Energy Step Code, and the ENERGY STAR program are creating demand for higher performing windows
- Many manufacturers are introducing window frame designs capable of handling triple pane glass in addition to dual pane

# Windows have come a long way, but . . .


Consumers are not highly motivated by energy savings

- In the Lower Mainland, insufficient heating cost savings to justify improvement beyond R-3 performance on payback basis

Consumers are more likely to replace older windows for better comfort

- “Easier to sell comfort than energy savings” – window manufacturer

Today, the BC Energy Step Code is the main market driver for improvements in the energy performance of windows

# 3 Anatomy of a modern window

Window frames

Multi-pane glass

Low-e coatings

Gas fill

Warm-edge spacers

# Window Frames

Today's window frames are mostly made of low-conductance materials

- Unplasticized vinyl (rigid PVC)
- Fiberglass
- Wood
- Aluminum – "thermally broken" frames have polymer struts connecting inner and outer metal frame components

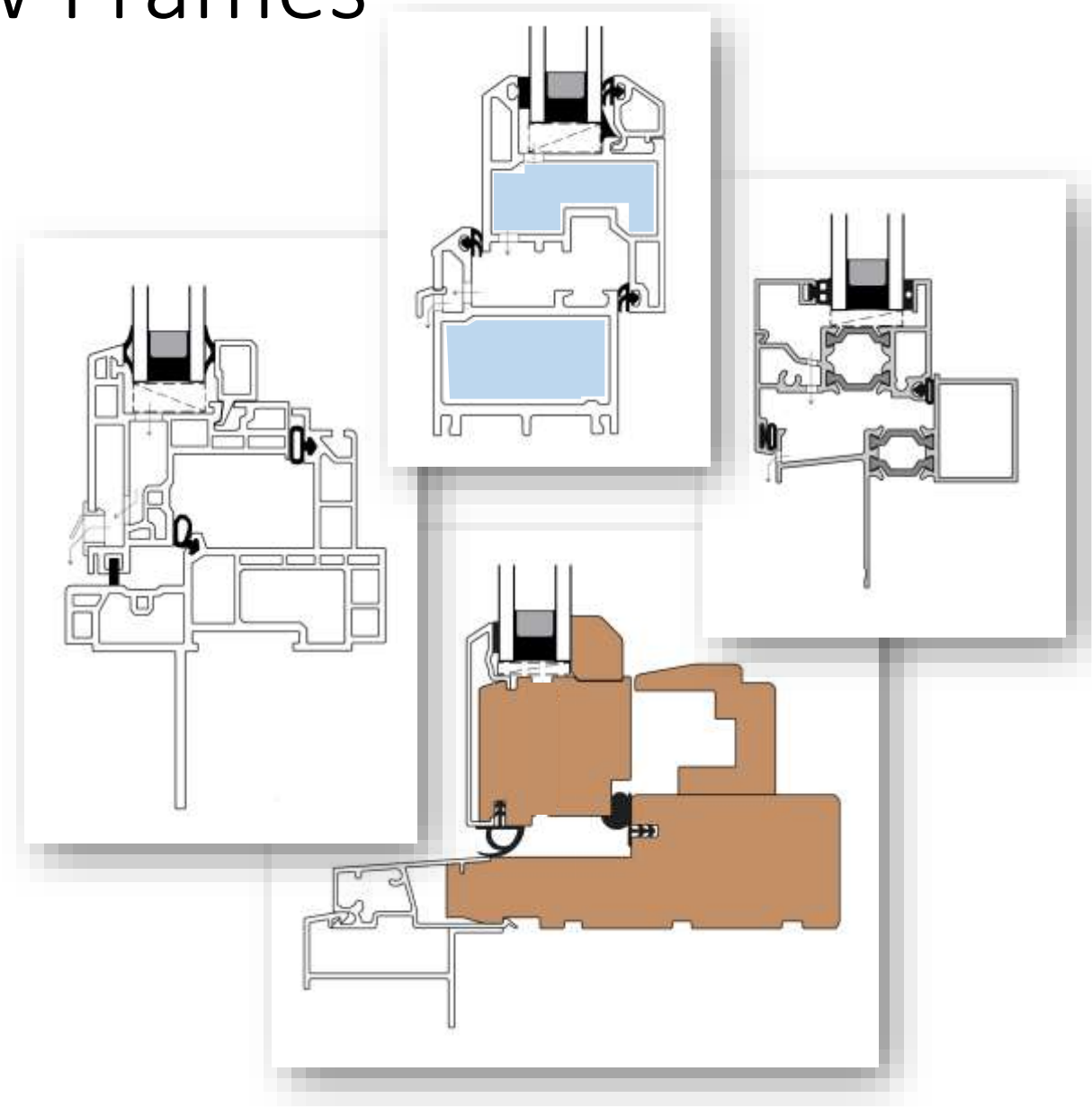

# Glass

The **greatest advances** in window energy performance have come from **innovations in glass technology**

- Low emissivity (low-e) glass coatings
- Cavities between panes filled with dense inert gasses (argon, krypton)
- Low-conductance spacers

Exterior

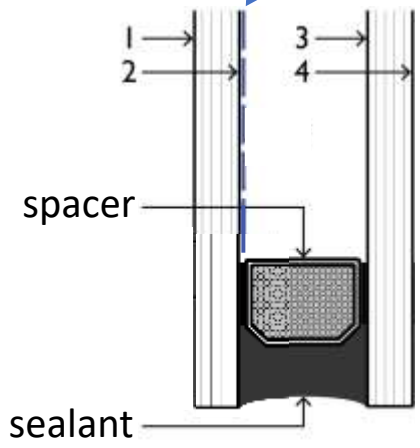


Interior

# Glass

The **greatest advances** in window energy performance have come from **innovations in glass technology**

- Low emissivity (low-e) glass coatings
- Cavities between panes filled with dense inert gasses (argon, krypton)
- Low-conductance spacers

Exterior

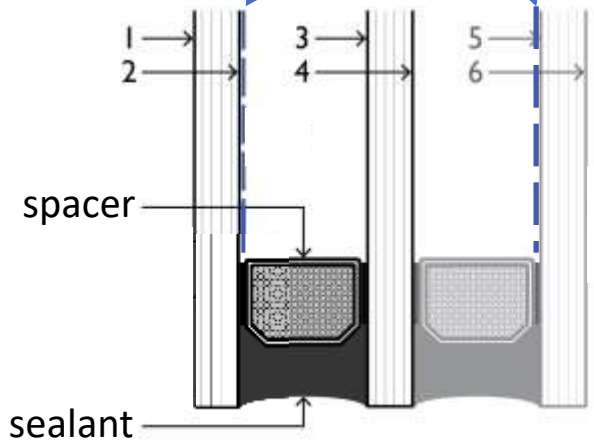


Interior

# Glass—low-emissivity (low-e) coatings

- Low-emittance materials can be applied to glass surfaces to block heat from being transmitted from one side of the glass to the other
- These coatings are designed to reduce transmission of selected wavelengths of electromagnetic radiation, from ultraviolet (UV) to long-wave infrared (IR)
  - to limit heat loss from the interior of a building to reduce winter heating demand
  - to limit discomfort from solar heat gain and glare for building occupants
- Today's coating technologies allow "fine tuning" of glass performance to balance energy, occupant comfort, visible light transmittance, and glass appearance

# Glass—low-emissivity (low-e) coatings

Emissivity is a measure of the effectiveness of the heat-blocking property of a low-e coating

. . . the proportion of heat energy transmitted through the coating

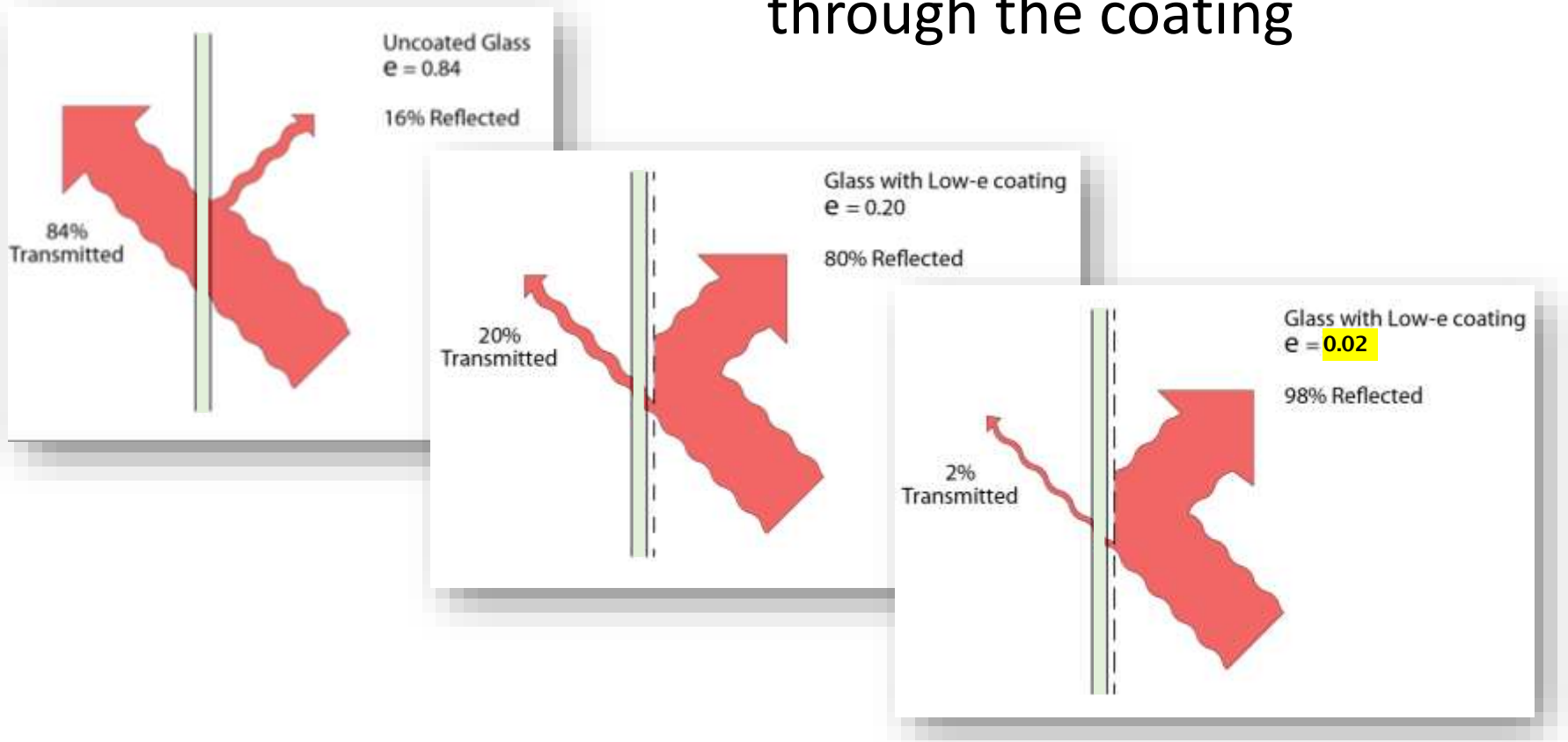

# Glass—low-emissivity (low-e) coatings

## Electromagnetic radiation emitted by the sun

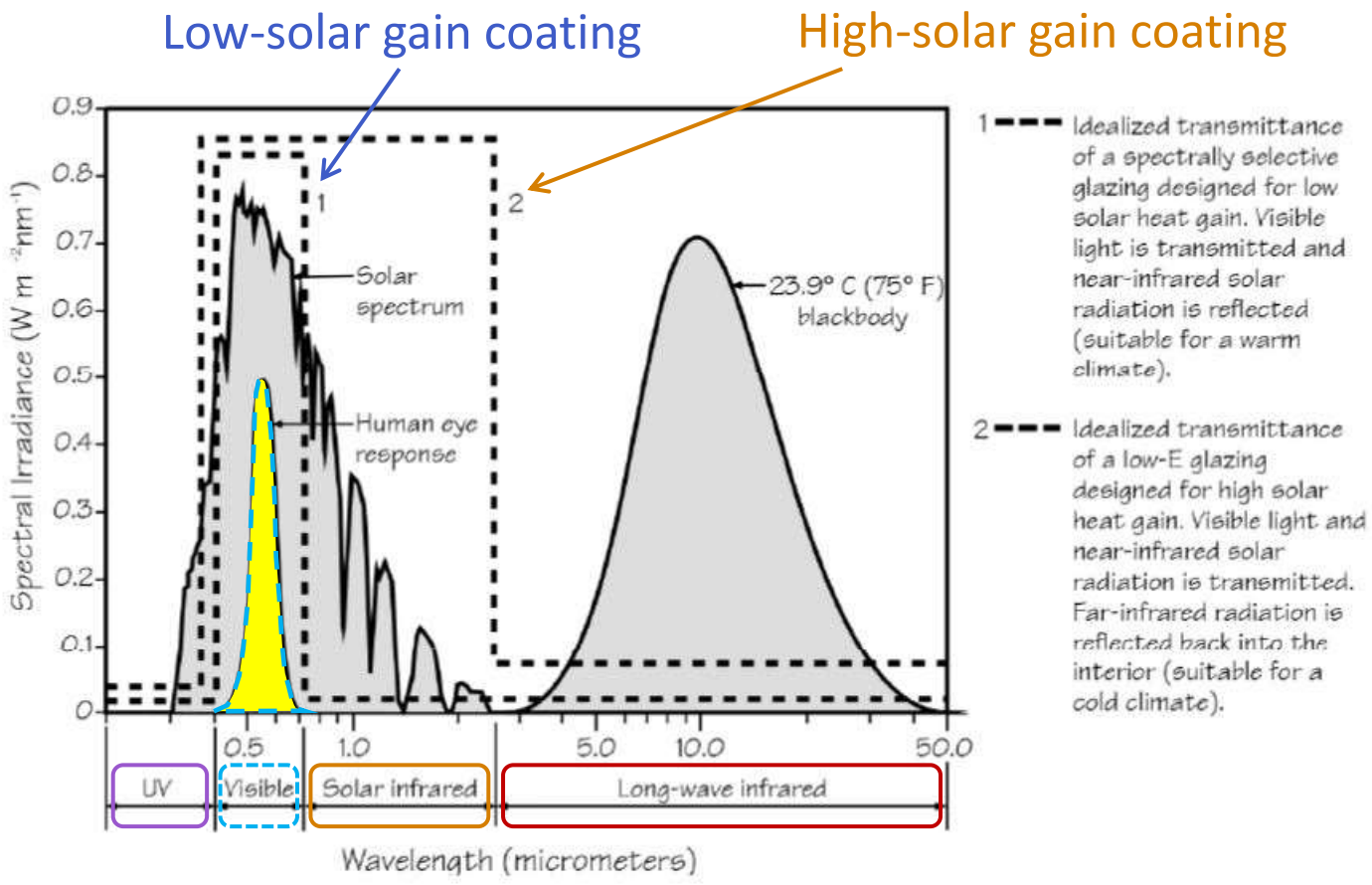


Figure 2-3, THERM 7 NFRC Simulation Manual

# Glass—low-emissivity (low-e) coatings

## Design objective for high solar heat gain: capture solar infrared

To admit hi-energy solar radiation in addition to visible spectrum

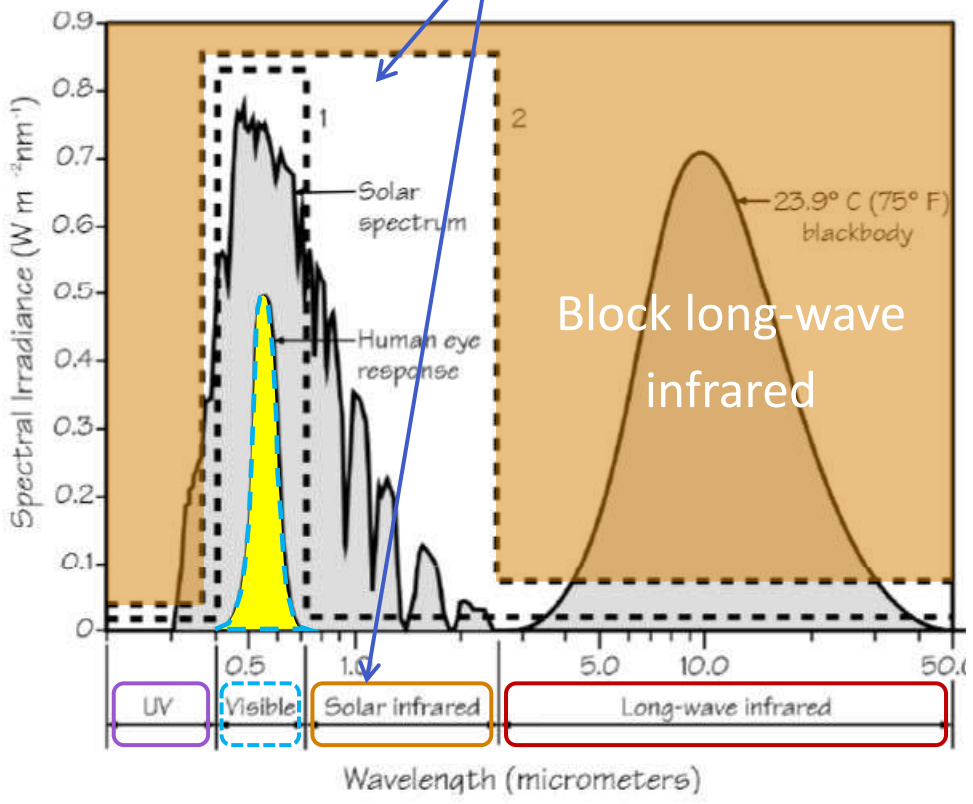


- Earliest low-e coatings were of this type
- Designed to maximize solar heat gain to reduce winter heating demand
- High solar gain coatings lead to overheating discomfort when larger windows and glass doors face south and west

Figure 2-3, THERM 7 NFRC Simulation Manual

# Glass—low-emissivity (low-e) coatings

## Design objective for low solar heat gain: block solar infrared

To block solar infrared radiation, admit only visible spectrum

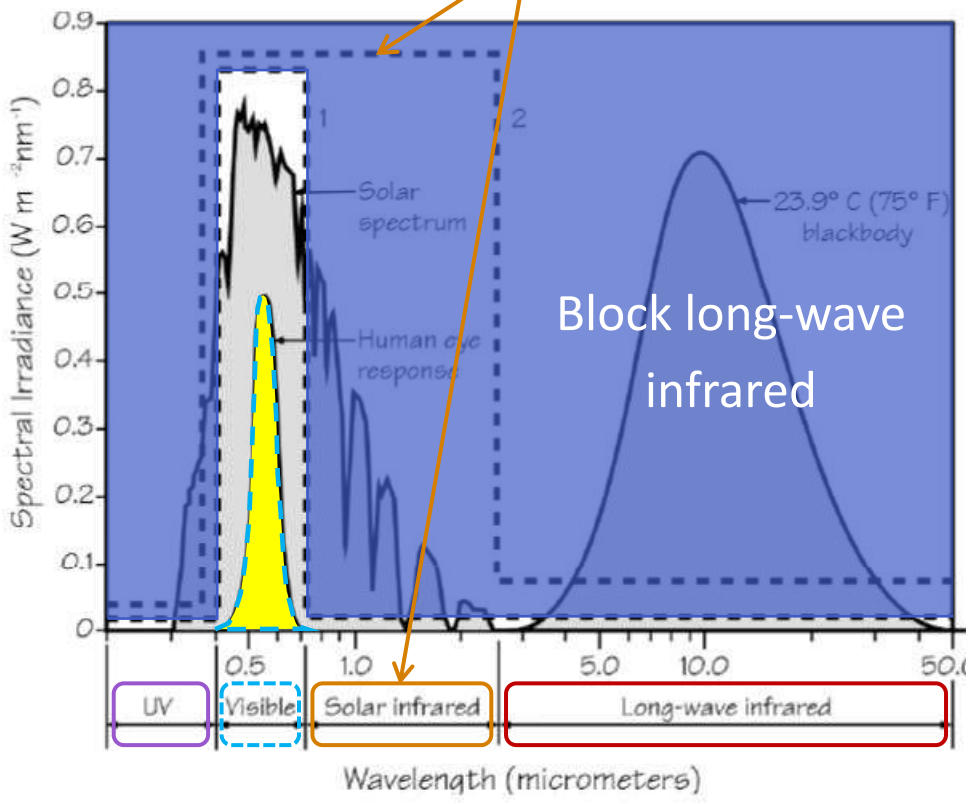


- Designed to minimize solar heat gain to reduce overheating discomfort
- Have lower U-values than high solar coatings
- Coatings with the lowest solar heat gain have lower visible light transmission, look “darker” from the exterior

Figure 2-3, THERM 7 NFRC Simulation Manual

# Glass—low-emissivity (low-e) coatings

## Typical low-e coating placement

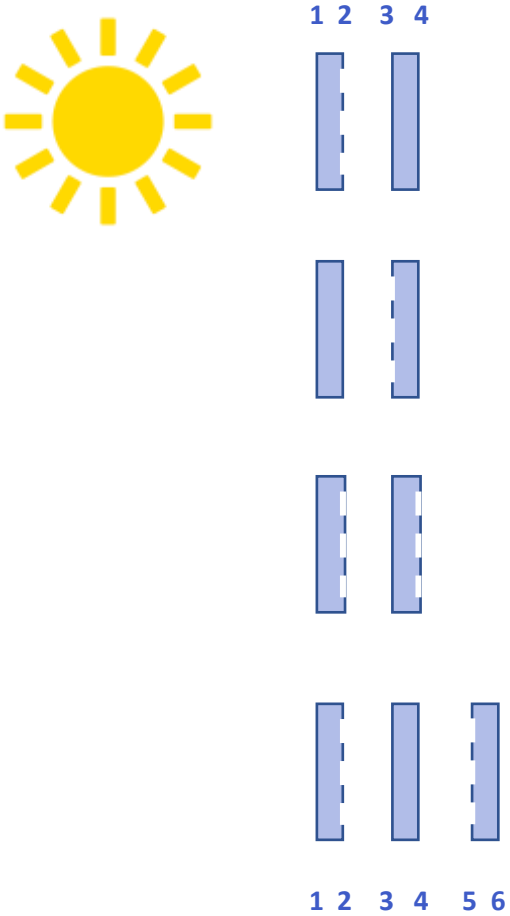


Surface 2: typical placement in US and milder climates (BC), best placement to minimize solar heat gain

Surface 3: typical placement in Central and Eastern Canada, increases solar heat gain (no change to U-value or SHGC)

Surfaces 2 and 4: lowers U-value to near triple pane, doesn't affect comfort but lowers indoor glass temperature (= dual pane clear) leading to greater condensation

Surfaces 2 and 5: typical triple pane IGU for lowest U-value, warmer indoor glass temperature, greatest comfort

# Glass—low conductance spacers

Aluminum spacers have been replaced with less conductive stainless steel spacers, as well as other materials that reduce heat flow between the glass panes

Hollow metal spacer

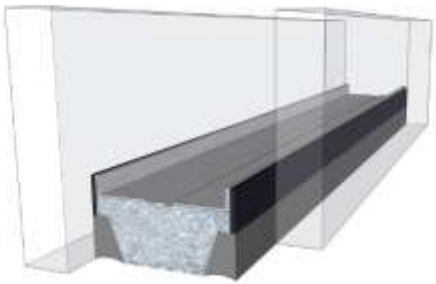

Hollow metal spacer

U-shape metal spacer

Hybrid butyl spacer

Silicone foam spacer

Hollow polymer spacer

# Glass—other heat transfer mechanisms

Heat travels through the glass by conduction through the spacers and by the air convection current in the cavity

- Use of gases heavier than air significantly lowers convection heat loss



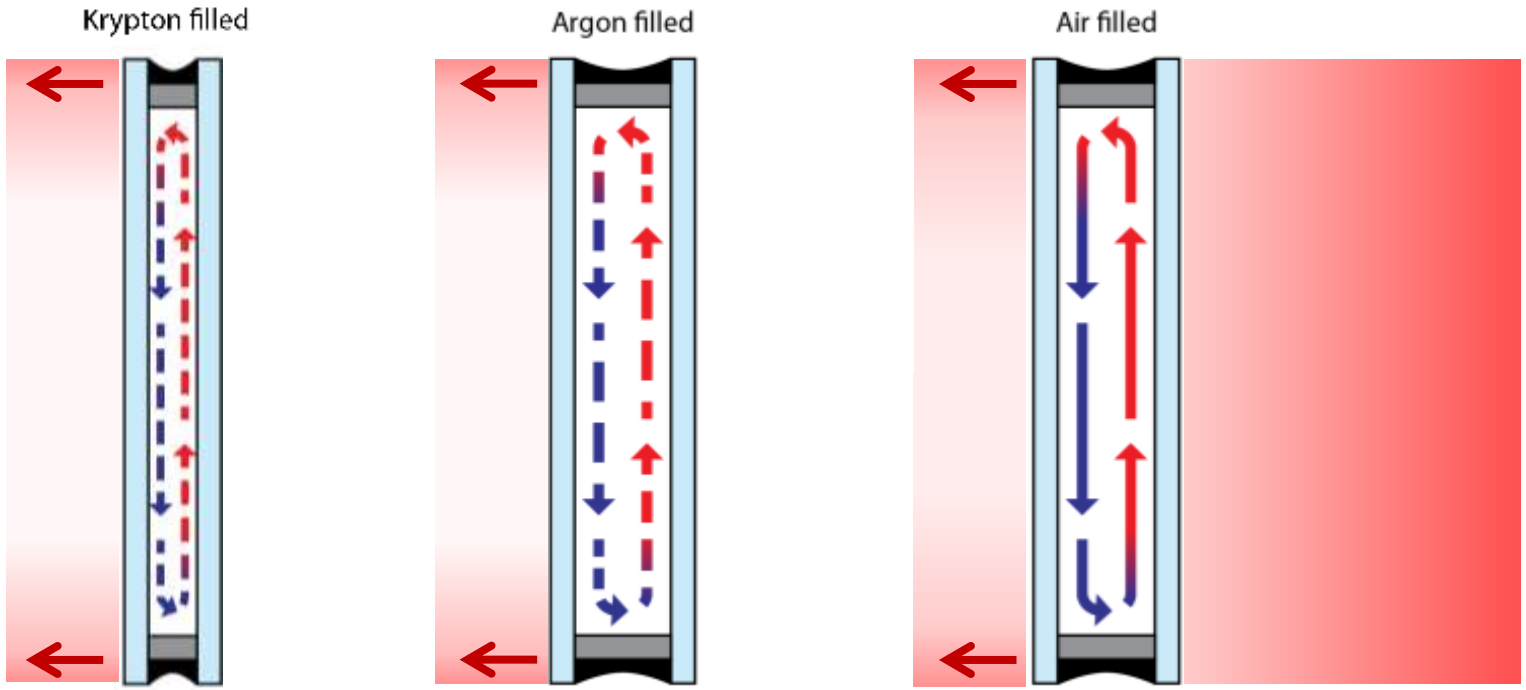

# 4 Window energy performance properties

U-factor, the rate of heat loss

Solar Heat Gain Coefficient (SHGC)

Visible Transmittance (VT)

Energy Rating (ER)

# Energy Performance properties

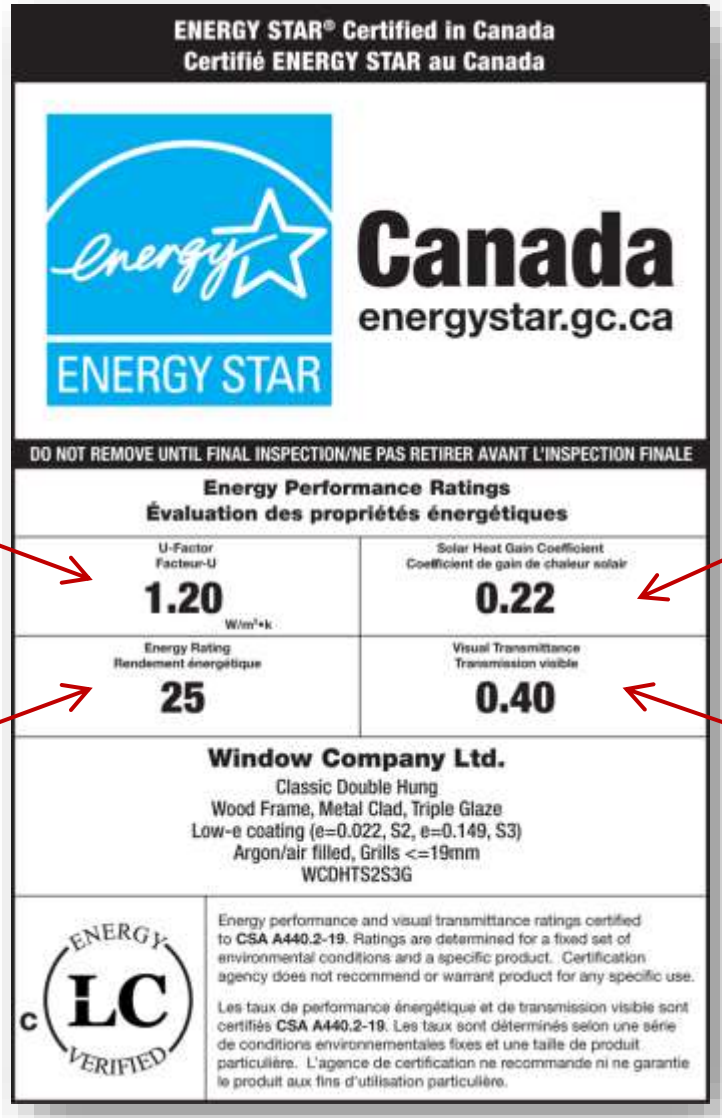


U-factor

Solar heat gain coefficent

Energy Rating

Visible transmittance

# Energy Performance properties

Example of ideal
non-ENERGY STAR label

U-factor

Solar heat gain coefficent

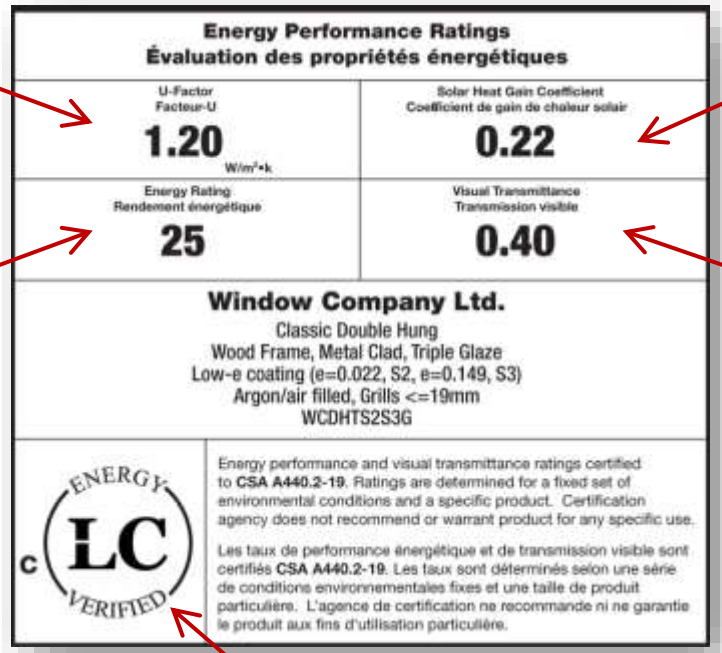


Energy Rating

Visible transmittance

By law, all energy performance labels in BC must be certified by accredited organizations

# U-factor

U-factor (the U-value of a window): overall rate at which heat escapes through a window due to conduction, radiation, and convection

- Heat travels at different rates through frame, center of glass, and edge of glass
- Expressed in either metric units ($W/m^2 \cdot K$) or inch-pound units ($Btu/h \cdot ft^2 \cdot °F$)
- Lower U-factors = better energy performance

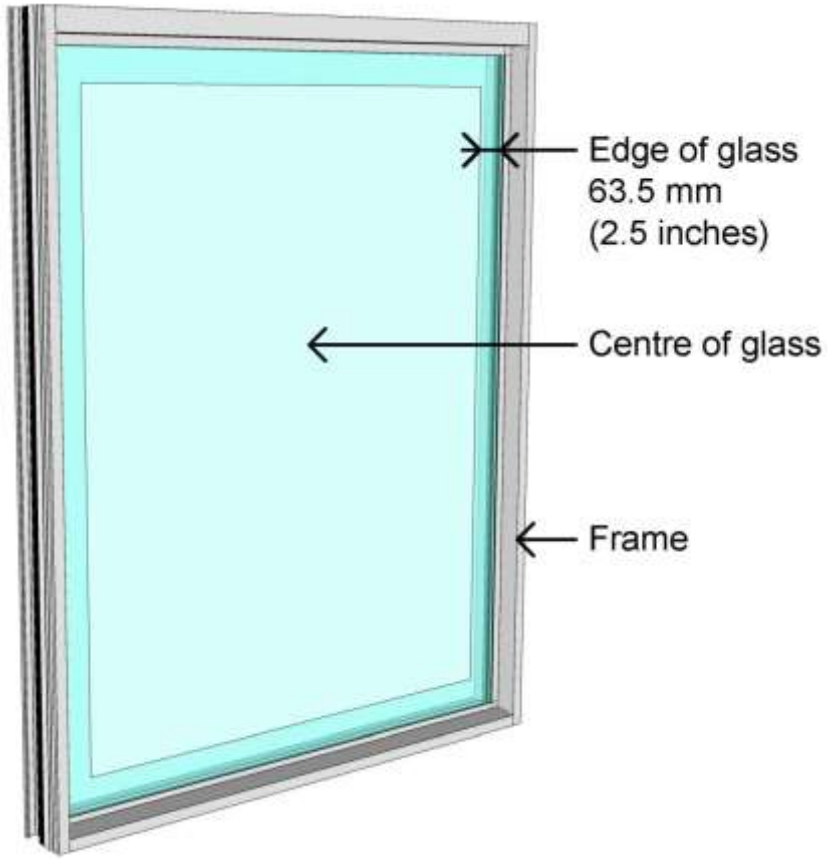

# U-factor heat transfer mechanisms

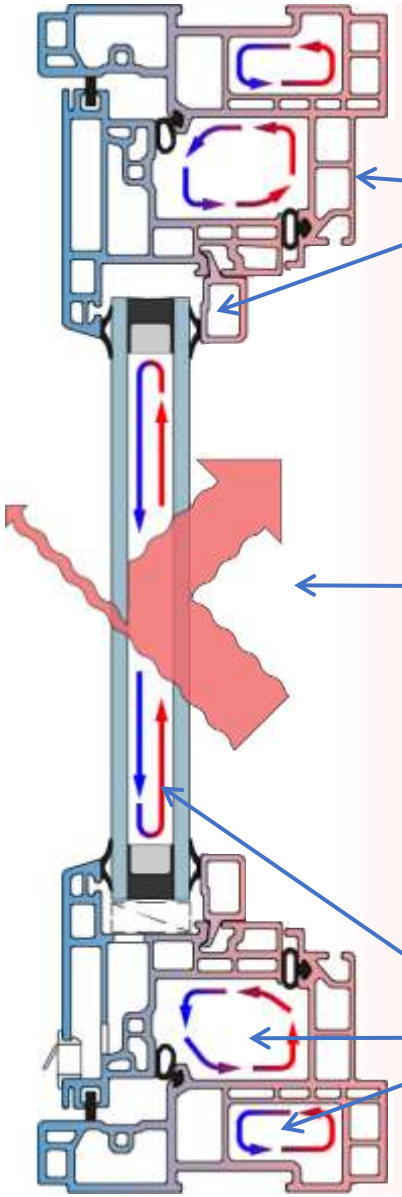

Conduction through solid frame materials and glass spacers

Radiation through glass. The best-performing Low-e coatings result in lower heat transfer per unit area of glass than frames.

Convection within air and gas-filled cavities

# U-factor heat transfer mechanisms



Upper frame member

Edge of glass 2.5”

Centre of glass

Edge of glass 2.5”

Lower frame member

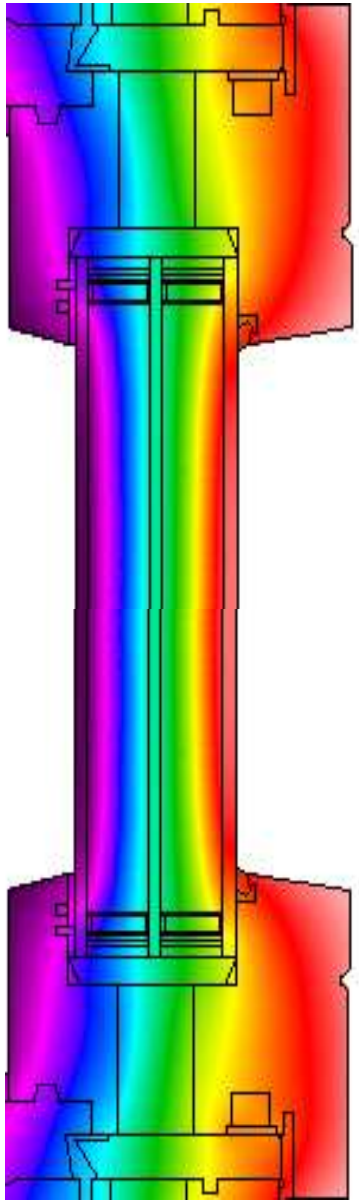

Conduction through solid frame materials and glass spacers

Radiation through glass. The best-performing Low-e coatings result in lower heat transfer per unit area of glass than frames.

Convection within air and gas-filled cavities

# U-factor

- To determine the overall U-factor for a window, we add up the heat lost through the frame and edge of glass for the top, sides, and bottom of the window, together with heat lost through the centre of glass, to arrive at a whole product U-factor
- The U-factor for each window and door product type is evaluated at a standard specified size, so product performance can be accurately compared

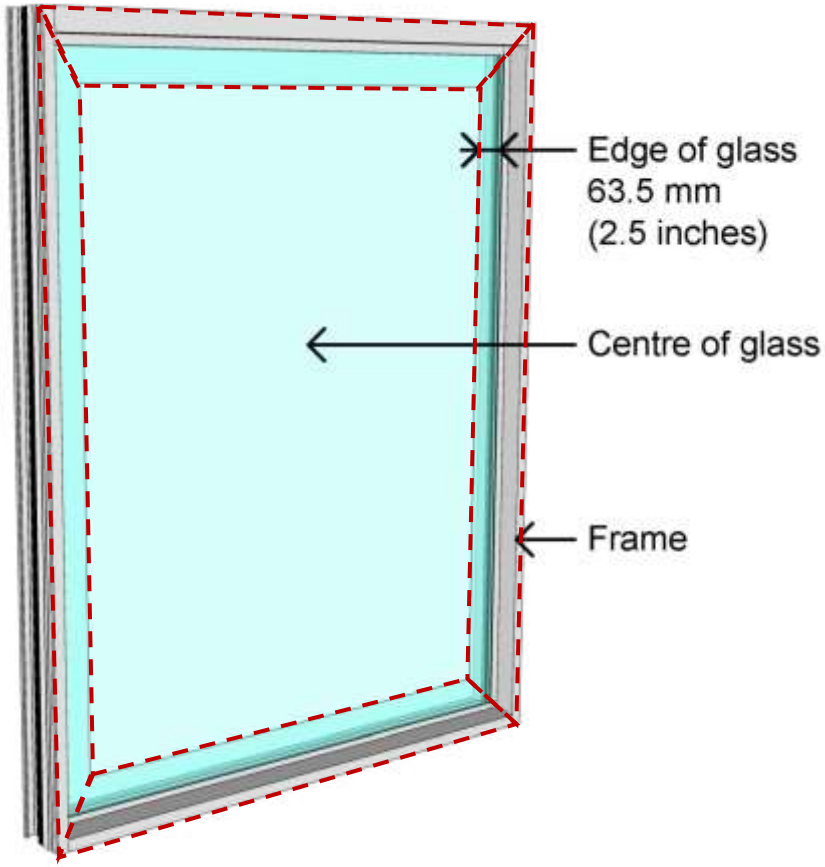

# Solar Heat Gain Coefficient (SHGC)

The proportion of incident solar radiation transferred through the glass and frames of a window, door or skylight product, expressed as a decimal fraction between 0.00 (totally opaque) and 1.00 (a hole in the wall)

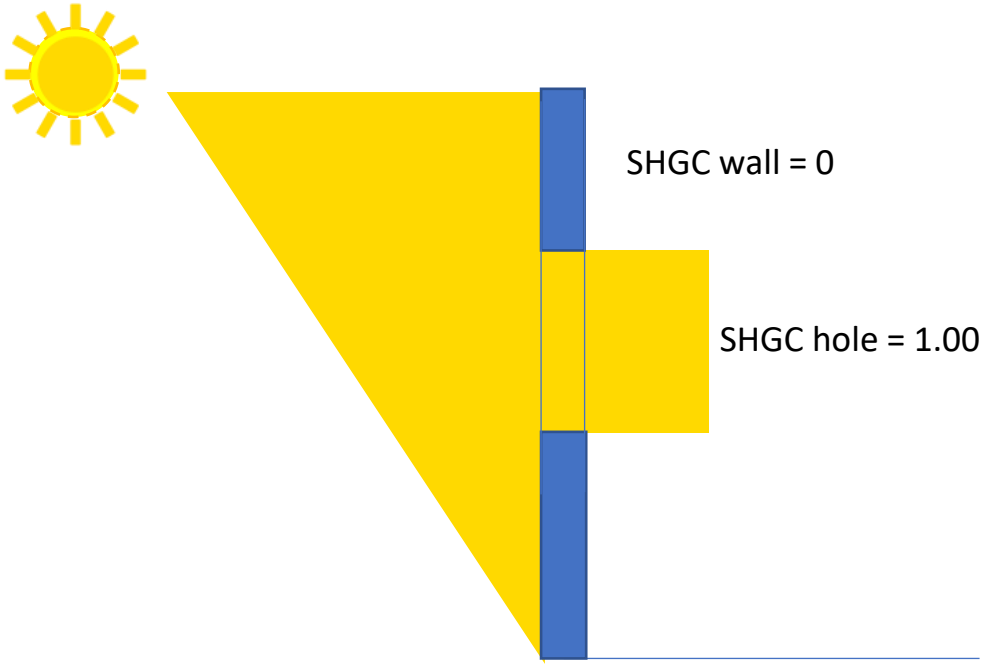


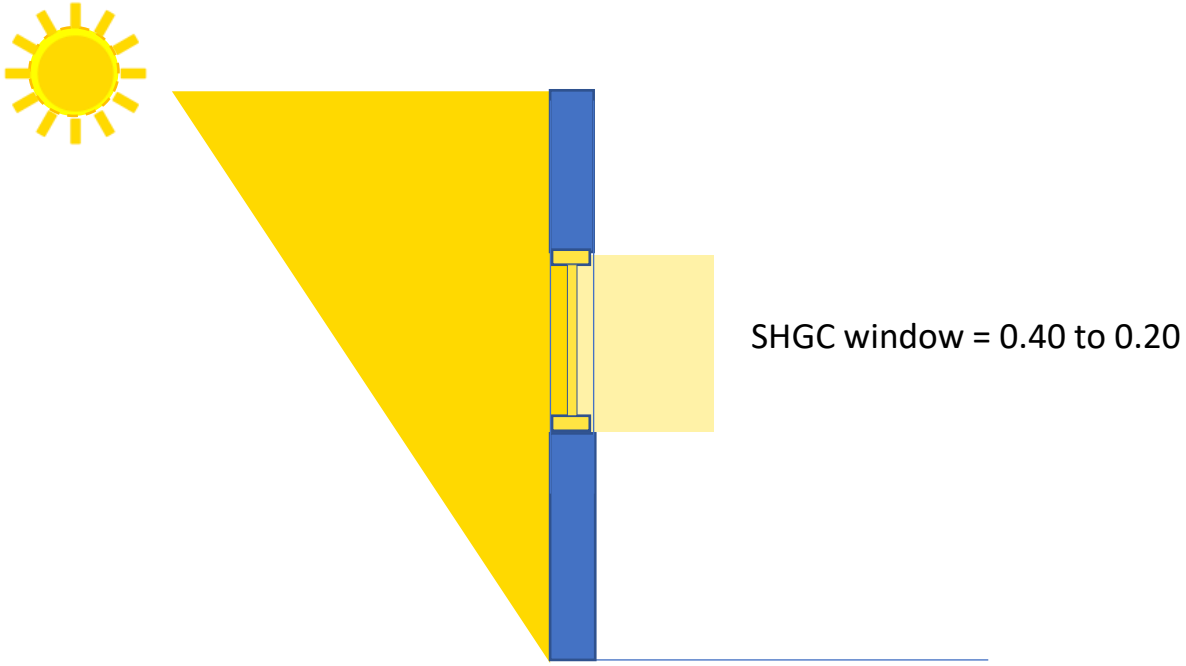

# Visible transmittance (VT)


- Dual pane clear glass has a VT of approx. 80%
- Low-e coatings vary in the degree to which they reduce VT
- Window frames further reduce the overall VT of a window

# Energy Rating (ER)

Canadian window energy performance metric

- ER equation in CSA A440.2 standard:

$$ER = \frac{[SHGC_w \times F_\theta \times H_t \times R] - [(T_{bi} - T_{bo}) \times U_w] - [(T_{bi} - T_{bo}) \times (PF/20) \times L_{75} \times \rho C_p]}{DF} + SF$$

- Simplified Equation:

U-factor heat loss

$$ER = (57.76 \times SHGC_w) - (21.90 \times U_w) - (1.97 \times L_{75}) + 40$$

Net solar heat gain

Air leakage heat loss

# Energy Rating (ER)

- Evaluates the “average” solar energy captured by windows, then subtracts energy losses due to U-value and air leakage
- Higher ER = greater overall energy efficiency
- Windows with high (less-effective) U-values and high Solar Heat Gain Coefficient can achieve high ER values resulting in low annual energy use
- High U/high SHGC windows can result in significant occupant discomfort from low window surface temperatures (winter) and significant overheating discomfort year ‘round
- This is why ER is not referenced in British Columbia building codes or in the BC Energy Efficiency Standards Regulation

# Energy performance metrics summary

- U-factor/U-value: rate of heat loss per unit area per unit temperature through window glass and frame at a specified standard size
- Solar Heat Gain Coefficient (SHGC): proportion of incident solar heat gain that passes through the glass and frames of windows and glass doors
- Visible Transmittance (VT): the proportion of visible light transmitted through the glass and frames of a window compared to the size of the wall opening before the window was installed
- Energy Rating (ER): Canadian energy efficiency rating that can be used to rank and compare windows. Studies have shown the ER successfully ranks annual window energy use (heating and cooling).

# 5 The future of windows is triple glazed

# The Future is Triple Glazed

- In August 2017, Natural Resources Canada (NRCan) announced a Market transformation program for residential windows, space heating, and water heating—three product categories considered essential for constructing Net Zero Ready homes (https://www.nrcan.gc.ca/sites/www.nrcan.gc.ca/files/emmc/pdf/Market-Transformation-Strategies_en.pdf)

# Market transformation strategies for energy-using equipment in the building sector

## Supporting the transition to a low-carbon economy

**Energy and Mines Ministers' Conference**

St. Andrews by-the-Sea, New Brunswick

August 2017

# The Future is Triple Glazed (in Canada)

**Figure 2. Aspirational goals to 2030 for residential windows in Canada**

**Short term:** By 2020, residential windows for sale in Canada meet an average U-factor of 1.6 (or an ER of 25). **R-3.5**

**Medium term:** By 2025,

- All residential windows for sale in Canada meet a U-factor of 1.2 (or an ER of 34). **ENERGY STAR 2020** **R-5**
- Residential windows with a U-factor of 0.8 can be manufactured and installed cost-effectively.[5] **R-7**

**Long term:** By 2030, all residential windows for sale in Canada meet a U-factor of 0.8 (or an ER of 40).[6]

(https://www.nrcan.gc.ca/sites/www.nrcan.gc.ca/files/emmc/pdf/Market-Transformation-Strategies_en.pdf)

# Step Codes and Tiered Energy Performance

- British Columbia was the first province to adopt a Net Zero Ready code approach
- In Spring of 2017 the province introduced the Energy Step Code which defined a 5-step code path to Net-Zero Ready buildings by 2032
- The steps defined a 15-year roadmap to give all stakeholders in the design and construction sector clarity about future energy performance code requirements
- The steps gave industry certainty of what the next code step will be, and what the ultimate goal would be in 2032
- The Energy Step Code allowed individual jurisdictions to “jump ahead” of the provincial code to require higher-than-current steps, at the scale of a rezoned parcel of land, or for the entire jurisdiction

# Step Code Concept

"For governments, the BC Energy Step Code offers assurance that new buildings are performing as billed. Meanwhile, on the other side of the counter, builders have a more flexible option to comply with the energy-efficiency provisions of the provincial legislation. The new standard empowers builders to pursue innovative, creative, cost-effective solutions—and allows them to incorporate leading-edge technologies as they come available.

"Local governments can choose to require or incentivize a given step of the BC Energy Step Code in new construction. In addition, beyond the regulatory context, builders and developers can adopt a given step to use across all of their projects, if they wish."

(https://energystepcode.ca/how-it-works/)

# BC Energy Step Code—Homes and Small Buildings

- Step 1: Existing 2017 code requirements with “Enhanced Compliance”
- Steps 2 – 5 require building-specific energy modeling and air-tightness testing to defined performance levels, giving builders flexibility in design and construction choices
- Step 5: the Net Zero Ready whole-building energy use level approximates Passive House requirements, and Passive House certified buildings automatically comply with Step 5

# BC Energy Step Code—Large Buildings

- Step 1: Existing 2017 code requirements with “Enhanced Compliance”
- Steps 2 – 3 require building-specific energy modeling and air-tightness testing to defined performance levels, giving builders flexibility in design and construction choices
- Step 4: the Net Zero Ready whole-building energy use level approximates Passive House requirements, and certified Passive House buildings comply with Step 4

# Tiered (Step) Energy Performance in the NBC

- “Tiered” (stepped) energy performance requirements similar to those of the BC Energy Step Code are coming to the 2020 NBC (December 2021)
- Small buildings will have both prescriptive (point-based) and performance (simulation-based) approaches to implementing the steps (“tiers”)
- Large buildings: a simulation-based 4-step Tiered performance path was added to the National Energy Code for Buildings (NECB)
- As in the BCBC, the highest Tier represents a Net Zero Ready performance level

# Step/Tiered Energy Codes Create Demand

- By allowing jurisdictions to voluntarily adopt and incentivize builders to comply with higher steps before those levels are incorporated into the base code, the step code/tiered code approach builds industry capacity incrementally, from now to 2032, and creates an initially limited, but growing demand for the triple pane windows that will be an integral component of Net Zero Ready homes and large buildings
- Many BC jurisdictions are currently at Step 3, some are going higher in the Fall
- Depending on the climate zone, triple pane windows become cost-effective to a builder at around Step 3

# Goals drive innovation . . .

- The 2017 Market Transformation Roadmap goals and the BC Energy Step Code have given manufacturers clear direction for the future
- The current (2020) ENERGY STAR performance level is U-1.22 or ER 34. Over 350 manufacturers selling products in Canada have complete product lines at that performance level.
- Most ENERGY STAR products are triple glazed, only a minority are dual pane products with high solar heat gain characteristics
- Smart manufacturers are not just aiming for ENERGY STAR performance, but for products at/near the 2030 Aspirational Goal that will still be in demand 10 and 15 years from now

# BC Step Code / Market Transformation Case Study

BC manufacturer needing to replace a ‘tired’ 12-year-old product line

With Step Code and Aspirational Goals in mind, decided to make the new product as efficient as it could be

Near-Passive House performance, as essentially same cost as old product line with dual pane glass

# 6 What comes next?

# The future of window glass?

**Proven technology:**
Triple pane insulating glass, multiple low-e coatings, gas fill, warm edge spacers

**Promising:**
“Dual” pane glass incorporating Vacuum insulated glass lite bonded to conventional glass

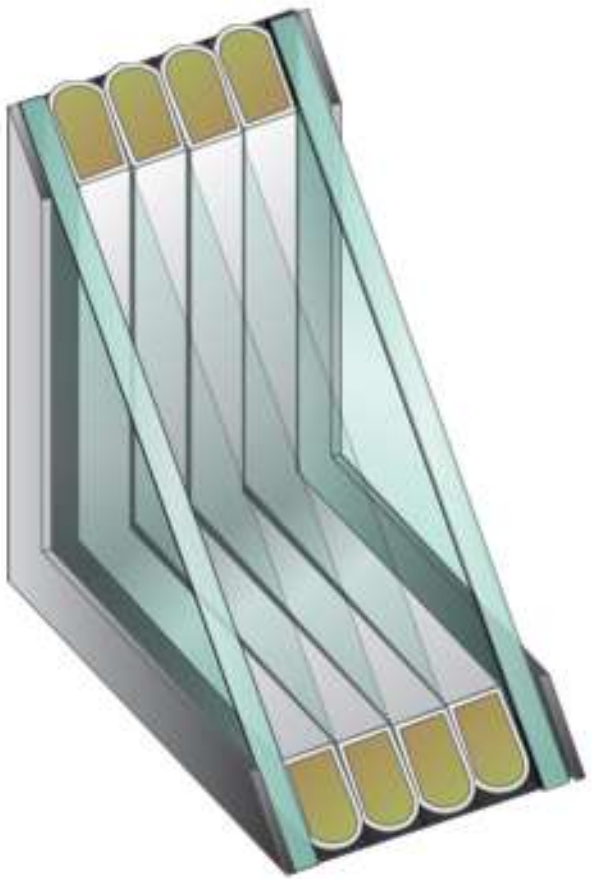

**Hopeful:**
Multiple suspended films with low-e coatings between two sheets of conventional glass

# The future of window frames?

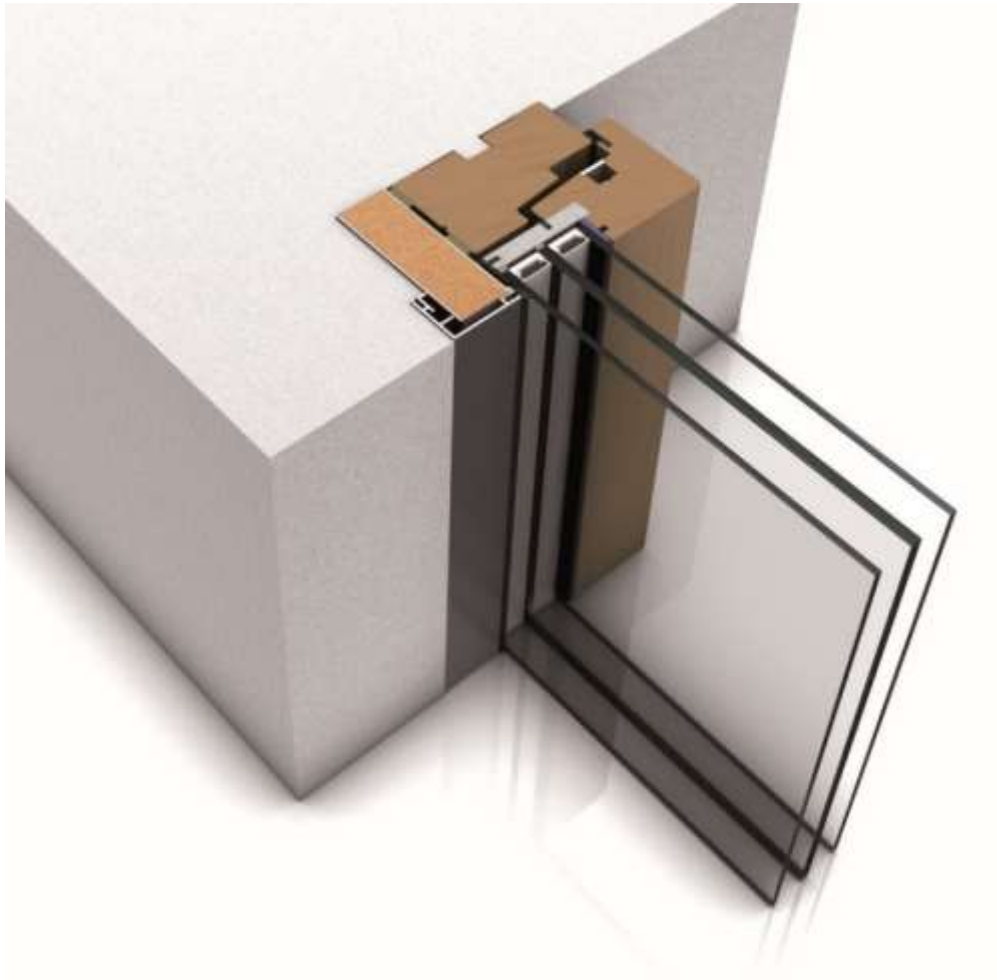

# Questions & Discussion

FENESTRATION CANADA

# Thank-you!